Schematic Diagram – Model RC-6551 or C

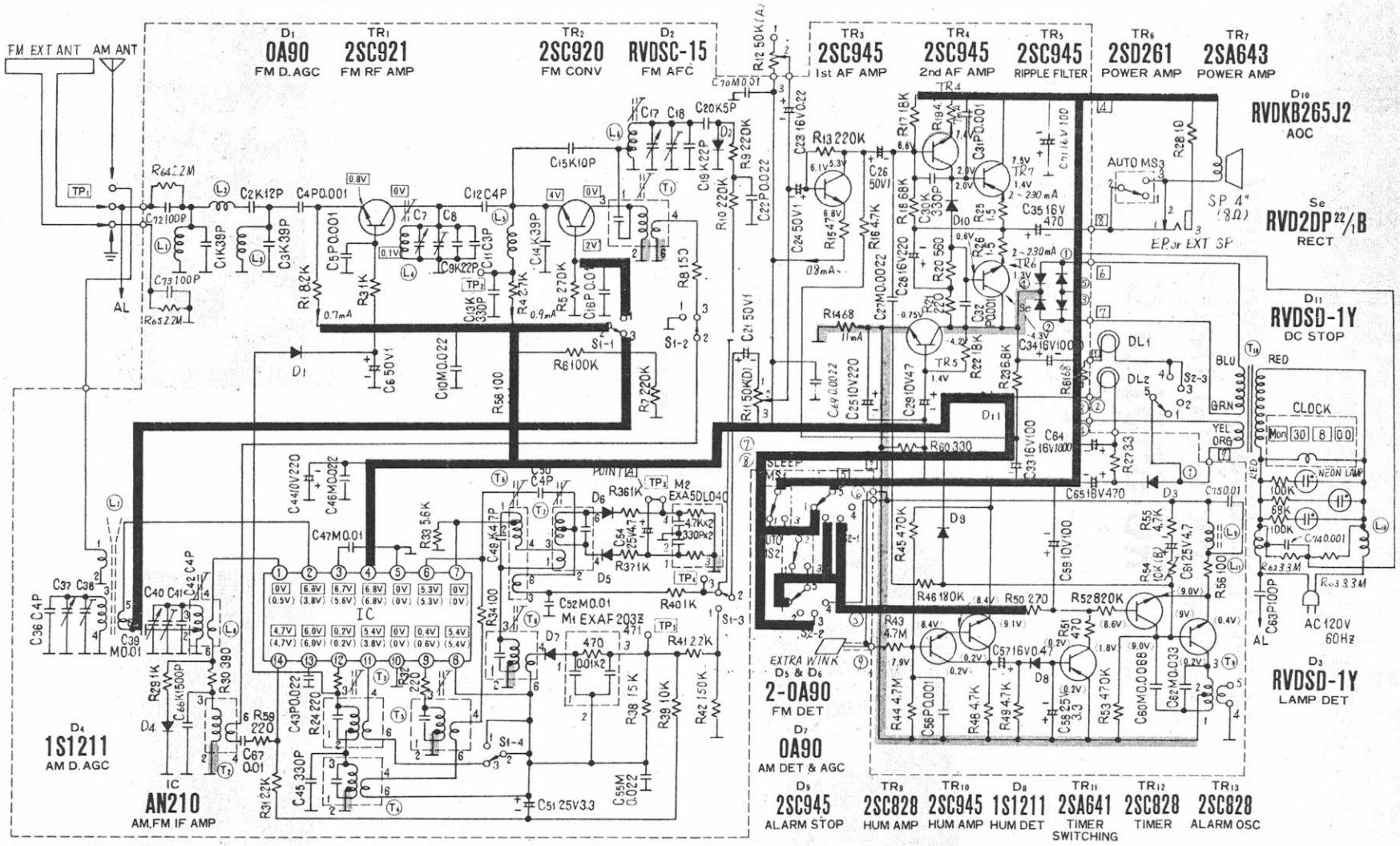

Notes:

1. S_{1-1}~S_{1-4}: Band selector switch in "FM" position.
2. S_{2-1}~S_{2-3}: Clock selector switch in "ON" position.
3. DC voltage measurements are taken with circuit tester 10 kΩ/V from chassis.

□.....FM position ( ).....AM position.

< >.....Alarm position.

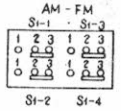

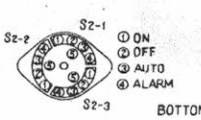

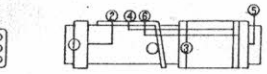

Positive Voltage Line

Negative Voltage Line