# 8FC-100E/8FC-100W

ISO

*Set using ISO screws*

8FC-100E: *GEP and General Export Model*

8FC-100W: *USA and Canada Model*

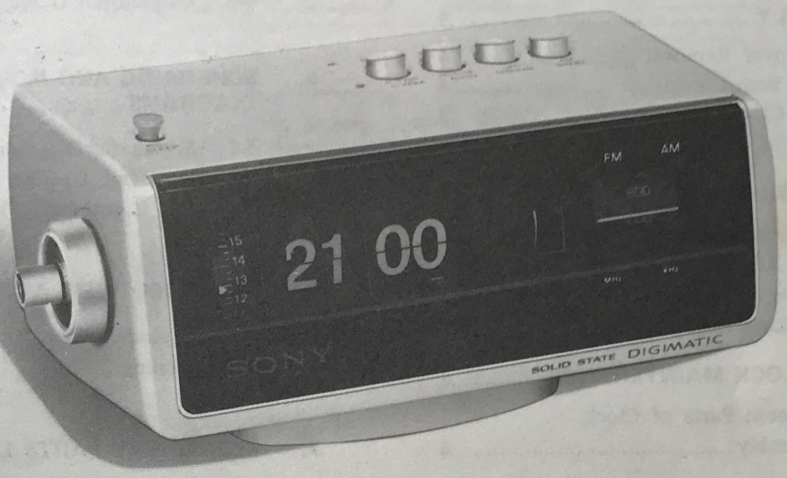


## SPECIFICATIONS

**Circuit System:** 10-transistor, 8-diode 1-thermistor, AM/FM 2-band superheterodyne with digital clock

**Frequency Coverage:** AM; 530～1,605 kHz (566～187 m)
FM; 87.5～108 MHz (3.42～2.78 m)

**Intermediate Frequency:** AM; 455 kHz
FM; 10.7 MHz

**Antenna System:** AM; built-in ferrite bar antenna
FM; ac line antenna. External antenna can be used.

**Sensitivity** at 50 mW output: AM; 90 μV/m (39 dB/m)
FM; 10 μV (20 dB) S/N 30 dB

**Selectivity** at ±10 kHz off-resonance: 28 dB at 1,000 kHz

**Power Output**
at 10% distortion: 400 mW
at maximum: 600 mW

**Current Drain:**
at zero signal: AM; 20 mA

**Power Requirements:** 8FC-100E;
220～250 V AC, 50 Hz, 5W
8FC-100W;
110～120 V AC, 60 Hz, 5W

**Speaker:** 3" (77 mm) PM dynamic, 8 Ω

**Dimensions:** 4½" (H) x 9" (W) x 5¼" (D)
114.5 mm(H) x 228 mm(W) x 134 mm(D)

**Weight:** 3 lb (1.36 kg)

SONY®

SERVICE MANUAL

## TABLE OF CONTENTS


| Section | Title | Page |
|---|---|---|
| | Specifications | 1 |
| 1. | **OUTLINE** | 3 |
| | 1-1. Block Diagram | 3 |
| | 1-2. Internal View | 3 |
| 2. | **DISASSEMBLY** | 4 |
| | 2-1. Rear Cover Removal | 4 |
| | 2-2. Circuit Board Removal | 4 |
| | 2-3. Digital Clock Removal | 5 |
| | 2-4. Dial Cord Stringing | 5 |
| 3. | **CIRCUIT ADJUSTMENTS** | 6 |
| | 3-1. A-m I-f Alignment | 6 |
| | 3-2. Fm I-f Alignment | 6 |
| | 3-3. Frequency Coverage and Tracking Adjustment | 7 |
| 4. | **DIGITAL CLOCK MAINTENANCE** | 8 |
| | 4-1. Component Parts of Clock Assembly | 8 |
| | 4-2. Precautions for Disassembly and Reassembly | 8 |
| | 4-3. Motor Assembly Replacement | 8 |
| | 4-4. Neon Lamp Replacement | 9 |
| | 4-5. Microswitch Replacement | 9 |
| | 4-6. Lubrication Guide | 10 |
| 5. | **SCHEMATIC AND MOUNTING DIAGRAMS** | 11 |
| | 5-1. Schematic Diagram | 11 |
| | 5-2. Mounting Diagram – Conductor Side – | 13 |
| 6. | **EXPLODED VIEW AND PACKING** | 15 |
| | 6-1. Exploded View | 15 |
| | 6-2. Packing | 17 |
| 7. | **ELECTRICAL PARTS LIST** | 18 |


### – Hardware Nomenclature –

**P** – Pan Head Screw

**PS** – Pan Head Screw with Spring Washer

**K** – Flat Countersunk Head Screw

**B** – Binding Head Screw

**RK** – Oval Countersunk Head Screw

**T** – Truss Head Screw

**R** – Round Head Screw

**F** – Flat Fillister Head Screw

**SC** – Set Screw

**E** – Retaining Ring (E Washer)

**W** – Washer
**SW** – Spring Washer
**LW** – Lock Washer
**N** – Nut

**– Example –**

⊕ P 3×10

- Type of Slot
- Length in mm (L)
- Diameter in mm (D)
- Type of Head

# SECTION 1
# OUTLINE

## 1-1. BLOCK DIAGRAM

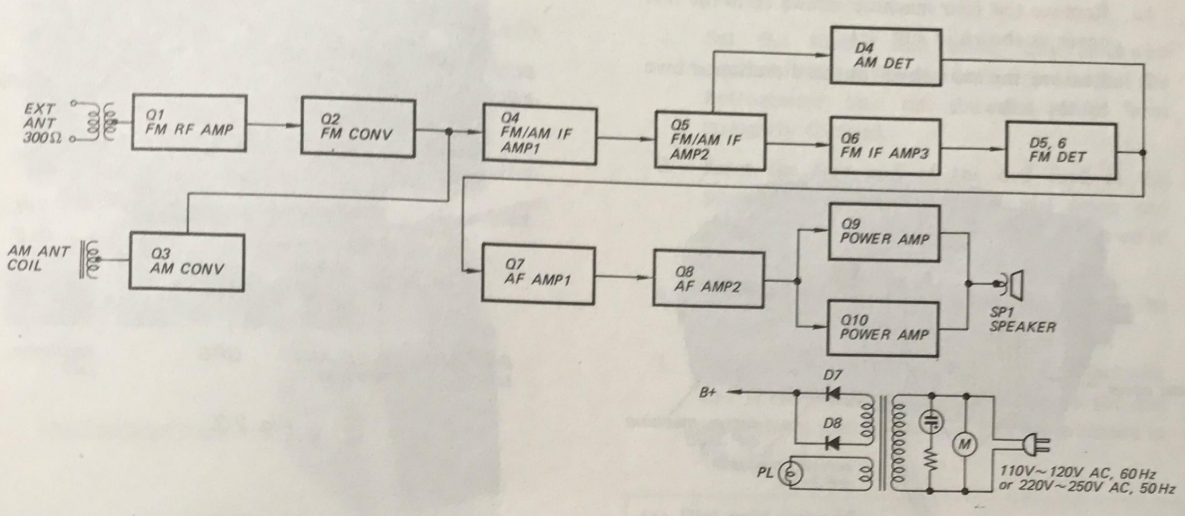


*Fig. 1-1.*

## 1-2. INTERNAL VIEW

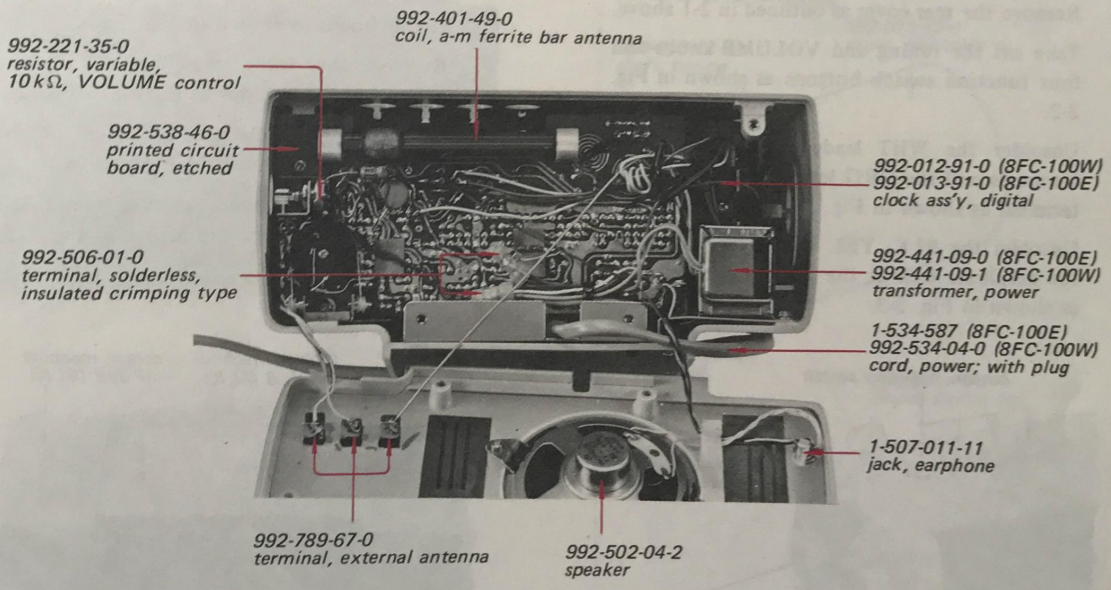


*Fig. 1-2. Internal view, with rear cover removed*

# SECTION 2
# DISASSEMBLY

## 2-1. REAR COVER REMOVAL

1. Remove the four machine screws from the rear cover as shown in Fig. 2-1.
2. Remove the rear cover in the direction shown by the arrow.

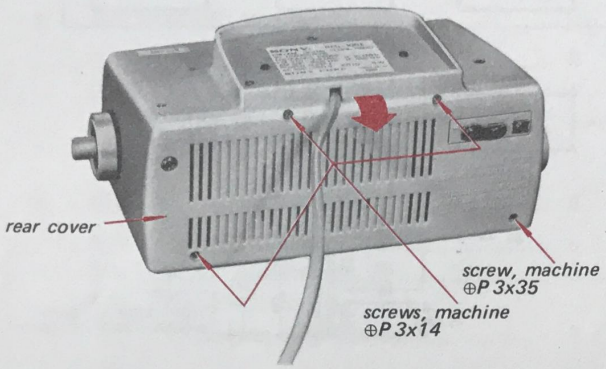


Fig. 2-1.

## 2-2. CIRCUIT BOARD REMOVAL

1. Remove the rear cover as outlined in 2-1 above.
2. Take off the tuning and VOLUME knobs and four function switch buttons as shown in Fig. 2-2.
3. Unsolder the WHT leads at the EXT ANT terminals and the ORG lead at the LINE ANT terminal as shown in Fig. 2-3.
4. Unsolder the BLK, YEL and GRN leads from the earphone jack at the printed circuit board as shown in Fig. 2-3.

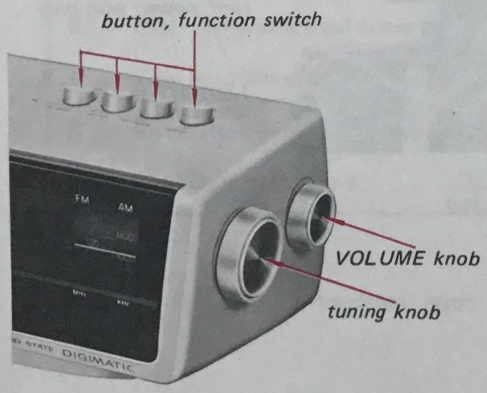


Fig. 2-2.

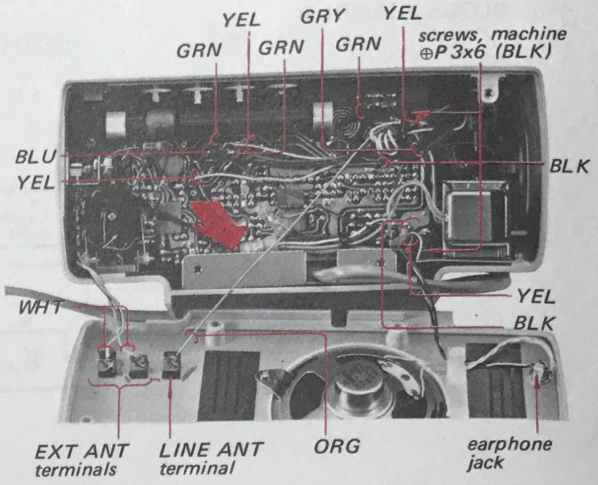


Fig. 2-3.

5. Unsolder the two GRN leads and two YEL leads from the power transformer at the printed circuit board as shown in Fig. 2-3.
6. Unsolder the BLK, BLU, GRN, GRY and YEL leads from the micro switches at the printed circuit board as shown in Fig. 2-3.
7. Remove the three machine screws at the bottom of the cabinet as shown in Fig. 2-4.
8. Remove the two machine screws at the printed circuit board as shown in Fig. 2-3.
9. Remove the printed circuit board in the direction shown by the arrow in Fig. 2-3.

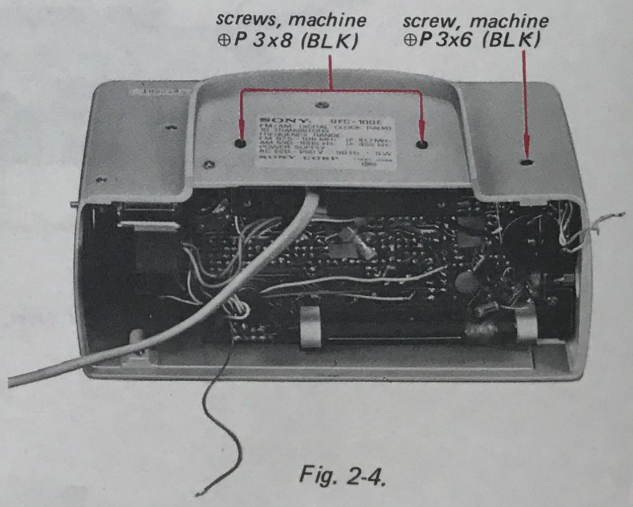


Fig. 2-4.

## 2-3. DIGITAL CLOCK REMOVAL

1. Remove the printed circuit board as outlined in 2-2 above.
2. Remove the TIME ADJUST, ALARM SET and SLEEP set knobs as shown in Fig. 2-5.
3. Remove the machine screw and boss as shown in Fig. 2-6.
4. Take out the digital clock in the direction shown by the arrow in Fig. 2-7.

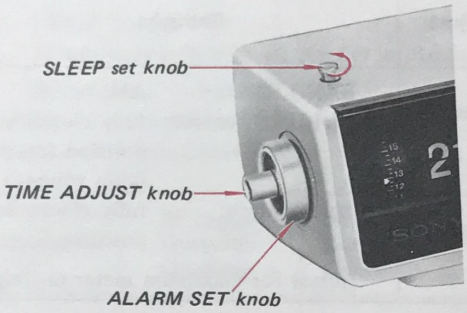


*Fig. 2-5.*

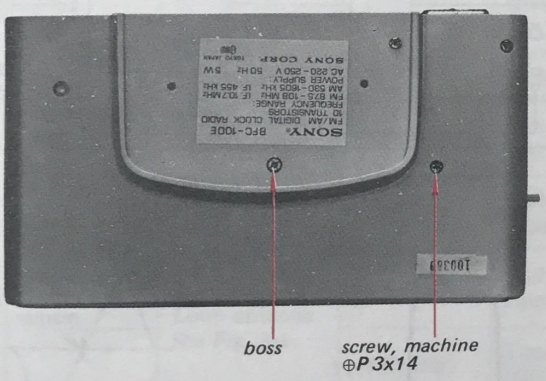


*Fig. 2-6.*

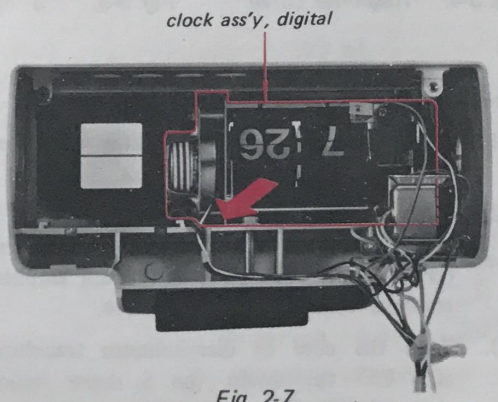


*Fig. 2-7.*

## 2-4. DIAL CORD STRINGING

1. Make a dial cord assembly as shown in Fig. 2-8 (a).
2. Set the tuning dial drum fully clockwise position and set the dial scale drum so that the bottommost line on the dial scale faces straightly forward.
3. Knot the free end of the dial cord at the protrusion A on the tuning dial drum and string the cord following the steps as shown in Fig. 2-8 (b).
4. Set the printed circuit board back into the cabinet.
5. Set the tuning dial knob fully counterclockwise and check that the uppermost line on the dial scale places just on the dial pointer as shown in Fig. 2-8 (c).

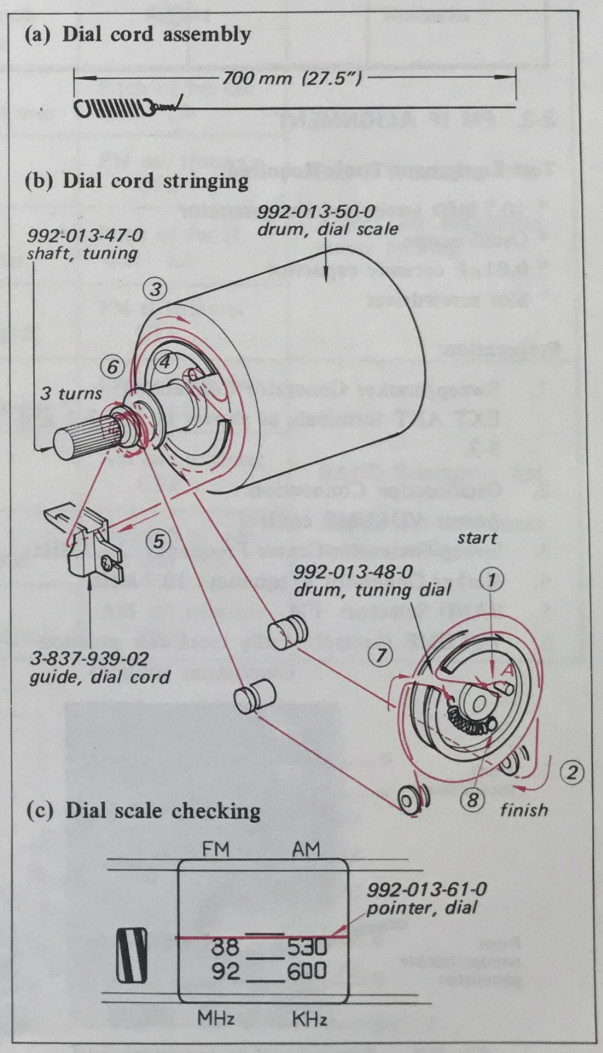


*Fig. 2-8.*

# SECTION 3
# CIRCUIT ADJUSTMENTS

## 3-1. AM IF ALIGNMENT

**Test Equipment/Tools Required:**

* Rf signal generator (for a-m)
* VTVM
* Loop antenna
* 8Ω resistor
* Slot screwdriver

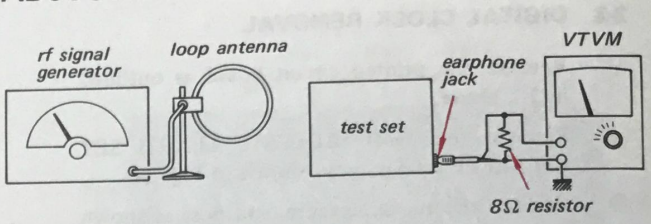


*Fig. 3-1. A-m i-f alignment, frequency coverage and tracking adjustment setup*

| Rf Signal Generator Coupling | Rf Signal Generator Frequency | VTVM Connection | Adjust | Remarks |
|---|---|---|---|---|
| Loop antenna (See Fig. 3-1.) | 455 kHz<br>1 kHz<br>(30% a-m) | Earphone jack with 8Ω load resistor in parallel. | Cores of<br>IFT A1<br>IFT A2<br>IFT A3<br>See Fig. 3-7. | BAND selector: AM<br>VOLUME control: fully clockwise position (maximum volume)<br>Tuning knob: fully clockwise position<br>Adjust for maximum meter reading. |

## 3-2. FM IF ALIGNMENT

**Test Equipment/Tools Required:**

* 10.7 MHz sweep/marker generator
* Oscilloscope
* 0.01 μF ceramic capacitor
* Slot screwdriver

**Preparation:**

1. Sweep/marker Generator Connection: EXT ANT terminals as shown in Fig. 3-2 and 3-3.
2. Oscilloscope Connection: Across VOLUME control
3. Sweep Generator Center Frequency: 10.7 MHz
4. Marker Generator Frequency: 10.7 MHz
5. BAND Selector: FM
6. VOLUME Control: Fully clockwise position (maximum volume)

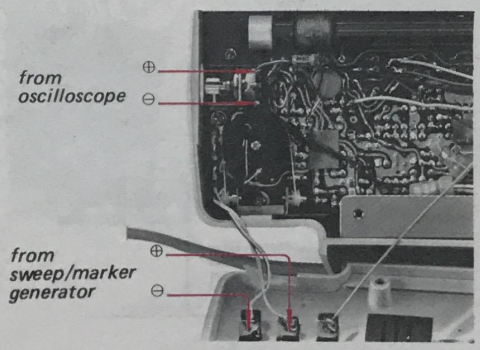


*Fig. 3-2. Sweep/marker generator and oscilloscope connections*

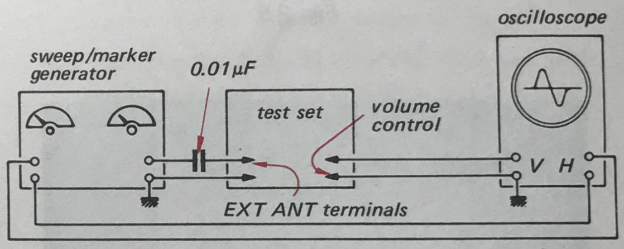


*Fig. 3-3. Fm i-f alignment setup*

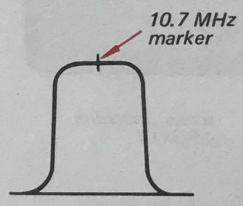


*Fig. 3-4. Response curve*

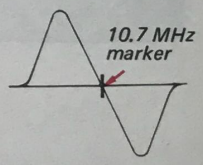


*Fig. 3-5. "S" curve*

**Procedure:**

1. Turn the core of discriminator transformer (IFT F5) fully counterclockwise.
2. Turn the core of fm i-f transformer (IFT F1, IFT F2, IFT F3) and discriminator transformer (IFT F4) to obtain the maximum amplitude response curve shown in Fig. 3-4.
3. Turn the core of discriminator transformer (IFT F5) to obtain the S curve response shown in Fig. 3-5.

## 3-3. FREQUENCY COVERAGE AND TRACKING ADJUSTMENT

**Test Equipment/Tools Required:**

* Rf signal generator (for fm and a-m)
* Loop antenna
* VTVM
* 8Ω resistor
* 0.01 μF ceramic capacitor
* Slot screwdriver

**Preparation:**

1. VTVM Connection:
   To earphone jack with 8Ω resistor in parallel.
2. Modulation:
   FM ..... 400 Hz ± 22.5 kHz frequency-modulated signal.
   AM ..... 1 kHz 30% amplitude-modulated signal.
3. VOLUME Control Setting:
   Fully clockwise position (maximum volume)

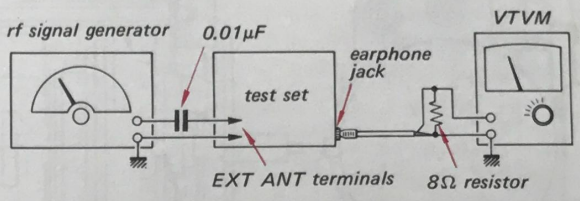


*Fig. 3-6. Fm frequency coverage and tracking adjustment setup*

| Adjustment | Rf Signal Generator Coupling | Rf Signal Generator Frequency | Receiver Tuning Knob Setting | Adjust | Remarks |
|---|---|---|---|---|---|
| FM Frequency Coverage | Direct connection to EXT ANT terminals See Fig. 3-6. | 86.5 MHz | Fully counterclockwise | Pitch of fm osc coil L4 | BAND Selector: FM<br>Adjust for maximum meter reading. |
| | | 109 MHz | Fully clockwise | FM osc trimmer CT2 | |
| FM Tracking | | 88 MHz | Tune in 88 MHz signal | Pitch of fm rf coil L2 | |
| | | 106 MHz | Tune in 106 MHz signal | FM rf trimmer CT1 | |
| AM Frequency Coverage | Loop antenna See Fig. 3-1. | 520 kHz | Fully counterclockwise | Core of a-m osc coil L6 | BAND Selector: AM<br>Adjust for maximum meter reading. |
| | | 1,680 kHz | Fully clockwise | AM osc trimmer CT4 | |
| AM Tracking | | 620 kHz | Tune in 620 kHz signal | Position of a-m ant coil L5 | |
| | | 1,400 kHz | Tune in 1,400 kHz signal | AM ant trimmer CT3 | |

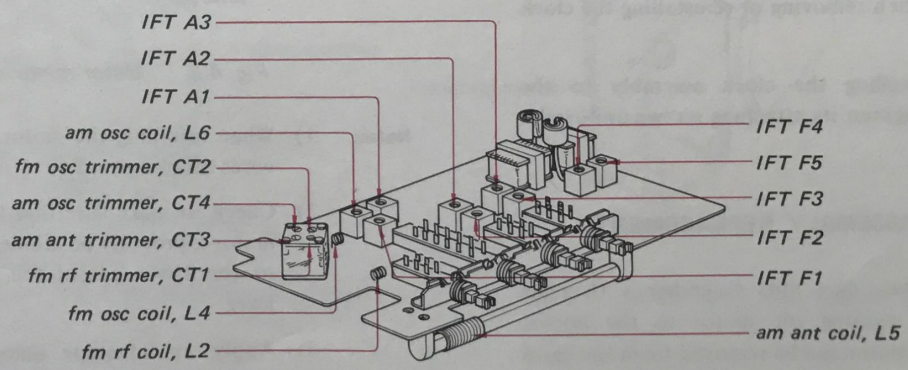


*Fig. 3-7. Adjusting parts location*

# SECTION 4
# DIGITAL CLOCK MAINTENANCE

## 4-1. COMPONENT PARTS OF CLOCK ASSEMBLY

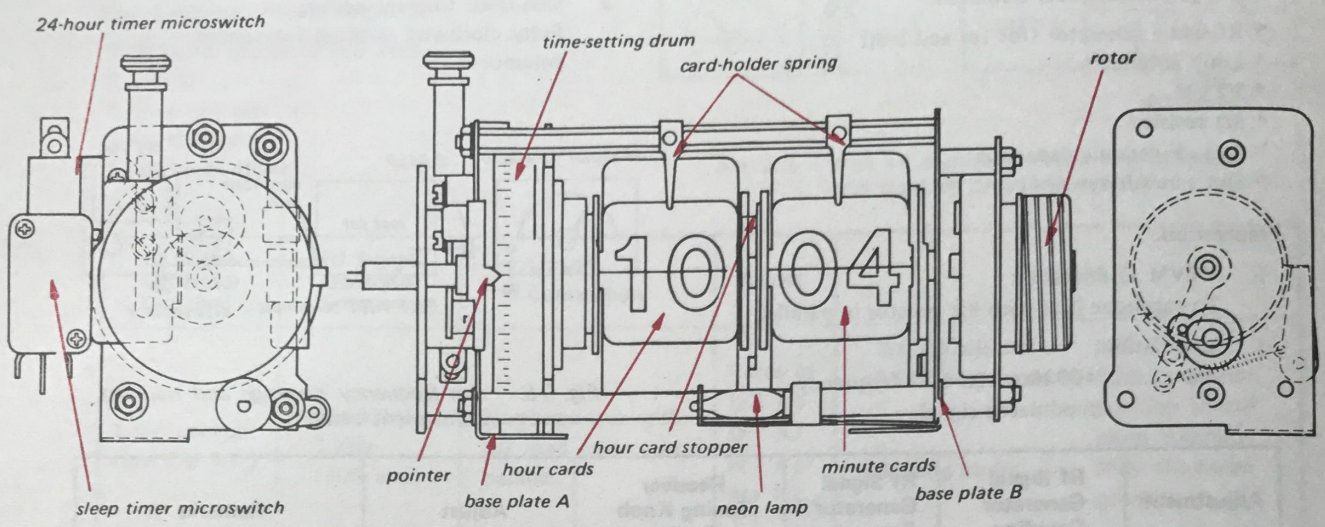


*Fig. 4-1. Layout of digital clock*

## 4-2. PRECAUTIONS FOR DISASSEMBLY AND REASSEMBLY

Following are the precautional items to be closely adhered to in disassembling and reassembling the clock.

(1) Wear clean gloves so as not to leave fingerprints and/or grease on the clock parts.

(2) Be sure to hold the clock assembly by gripping the base plates (A) and (B) when removing or reinstalling the clock assembly.

(3) Do not touch the rotor of the motor when handling the clock assembly.

(4) Do not touch the hour and minute cards, hour card stopper, card-holder spring and pointer.

(5) Be careful not to give any blow to the rotor and pointer when removing or reinstalling the clock assembly.

(6) When installing the clock assembly to the cabinet, tighten its attaching screws uniformly.

## 4-3. MOTOR ASSEMBLY REPLACEMENT

(1) Remove two hex nuts (together with plain washers), securing the motor to the bosses. Now, the motor can be removed from the clock assembly.

(2) Install a new motor in place with its rotor side facing outside, and secure it by tightening the hex nuts good and hard.

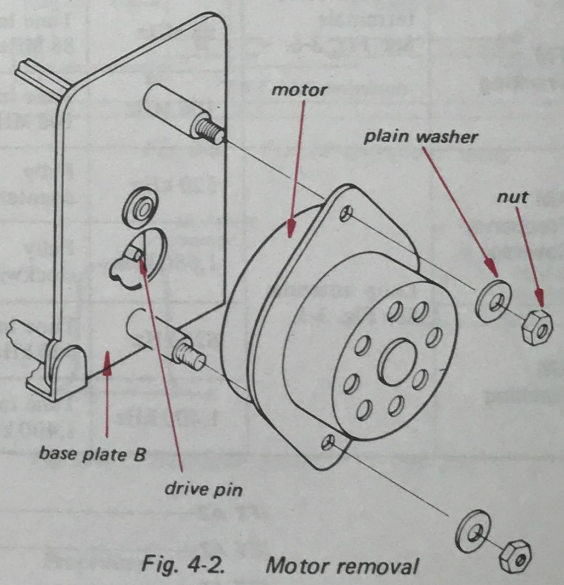


*Fig. 4-2. Motor removal*

**Notes:**

1) When installing the motor, keep its lead wires lifted upward.

2) Check to make sure that the cam of the motor is properly positioned with respect to the driven pin of the minute count lever.

3) Apply an adequate amount of screw locking agent to the hex nuts to prevent the possibility of loosening them.

## 4-4. NEON LAMP REPLACEMENT

(1) The lamp can be removed from the clock assembly by straightening its clamp.

(2) Install a new neon lamp in place by inserting its tip into the hole provided in the support plate. Then, bend up the clamp against the lamp for securing.

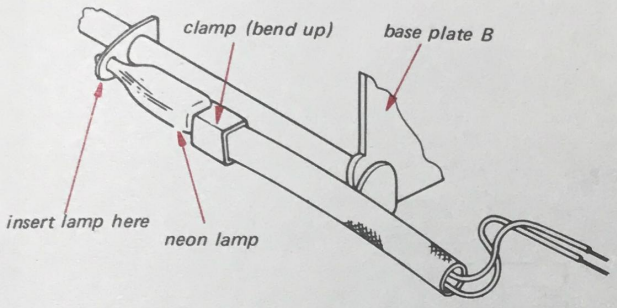


*Fig. 4-3 Neon lamp installation*

## 4-5. MICROSWITCH REPLACEMENT

### (1) 24-hour Timer Microswitch

This microswitch can be removed for replacement by removing two attaching screws, upper and lower, as shown in Fig. 4-4. The upper attaching screw is used to secure the microswitch lever shaft also. It is, therefore, necessary to see, upon installing a new switch, if the microswitch lever is properly installed in place. Check the microswitch operation in the following manner.

a) Finger-rotate the time-setting drum counter-clockwise (as viewed from the knob gear side of the clock), making sure that the switch button (red) is depressed by the spring-loaded microswitch lever when the clutch cam is engaged (moved toward the drum).

b) With the clutch cam kept in engaged position, finger-lift the microswitch lever and release it to see if the lever is spring-returned to depress the switch button properly.

c) Make sure that the microswitch is turned off when the clutch cam is disengaged (moved away from the drum). Repeat the operation as in Steps a) through c) above at four equal intervals of time setting to make sure that the switch properly operated.

### (2) Sleep Timer Microswitch

This microswitch, like the 24-hour timer switch, can easily be removed by removing two attaching screws then it has to be replaced. Upon installing, check the switch for proper operation. The switch must be turned on when the rack is pulled upward, and vice versa. The left-hand edge of the rack is profiled to control the switch button. The rack disengages from the 3rd gear to drop by itself, releasing the switch button (red) when the button is on the half-way of the beveled edge of the rack on its downward stroke. Remember that if the switch is positioned too close to the rack when installed, the force for pulling up the rack will be increased.

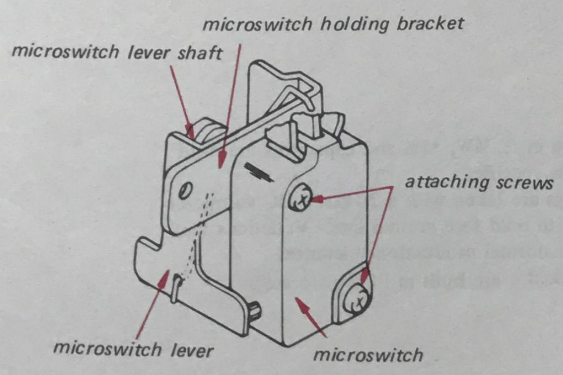


*Fig. 4-4 24-hour timer microswitch installation*

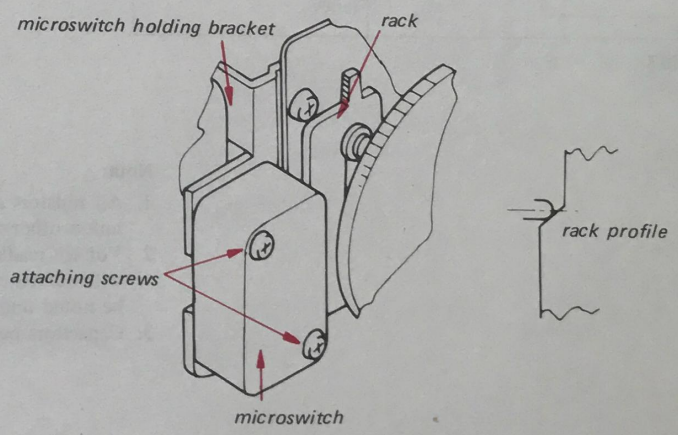


*Fig. 4-5 Sleep timer microswitch installation*

## 4-6. LUBRICATION GUIDE

**Note:** When assembling, lubricate the following parts as specified in Fig. 4-6. The lubrication oil to be used is "Launa 40". Only oils equivalent to "Launa 40" must be selected for use. Do not apply too much oil.

a) Main shaft bearing

b) 3rd gear shaft (1 or 2 drops)

c) Idler gear shaft

d) Rack sliding surface and rack guide screws (1 or 2 drops)

e) Main shaft bearing at minute-counting lever

f) Minute-counting click shaft (1 or 2 drops)

g) Minute-setting lever shaft (1 or 2 drops)

h) Minute-counting lever shaft and cam contact surface

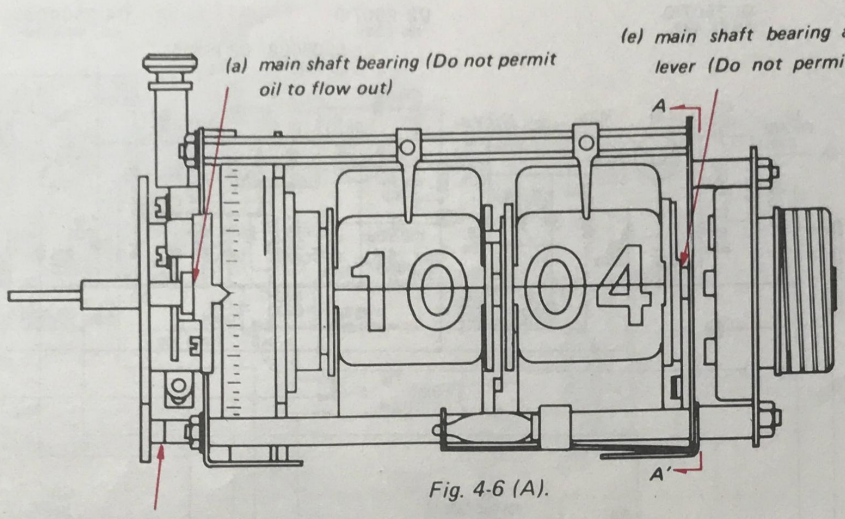


Fig. 4-6 (A).

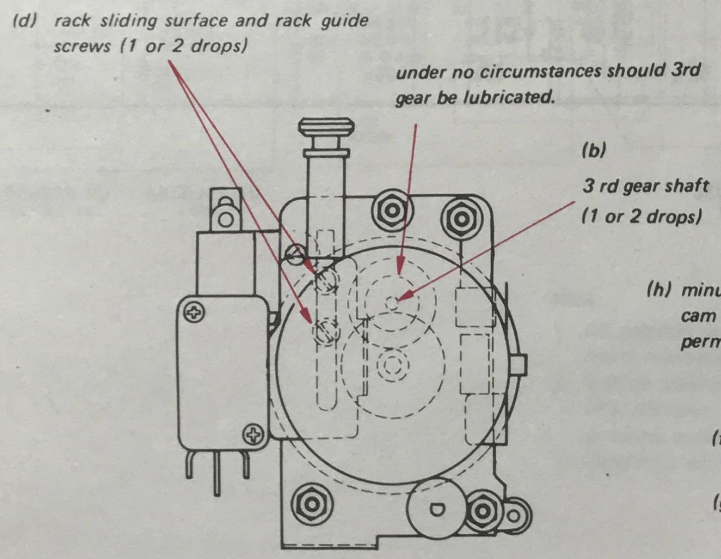


Fig. 4-6 (B).

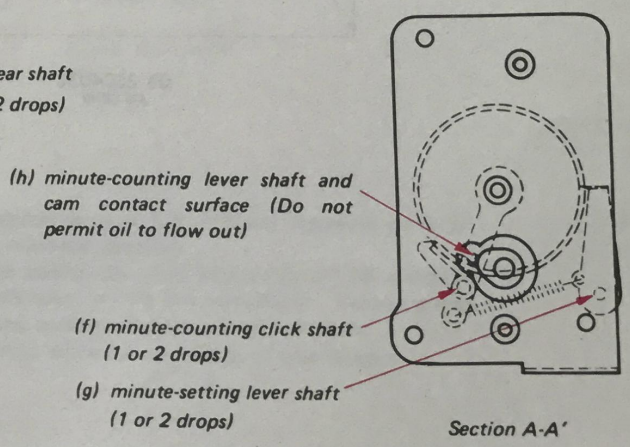


Fig. 4-6 (C).

# SECTION 5
# SCHEMATIC AND MOUNTING DIAGRAMS

## 5-1. SCHEMATIC DIAGRAM

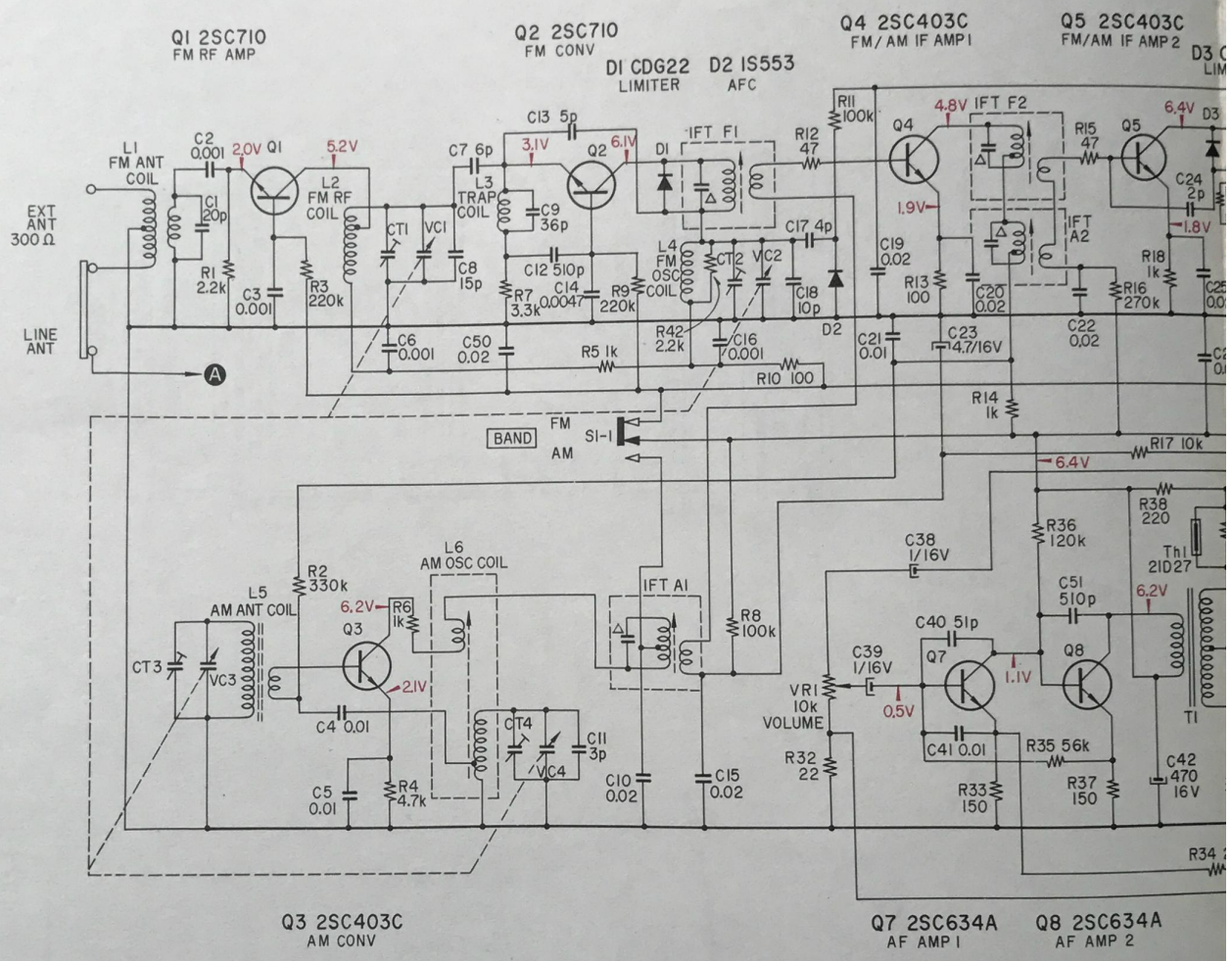

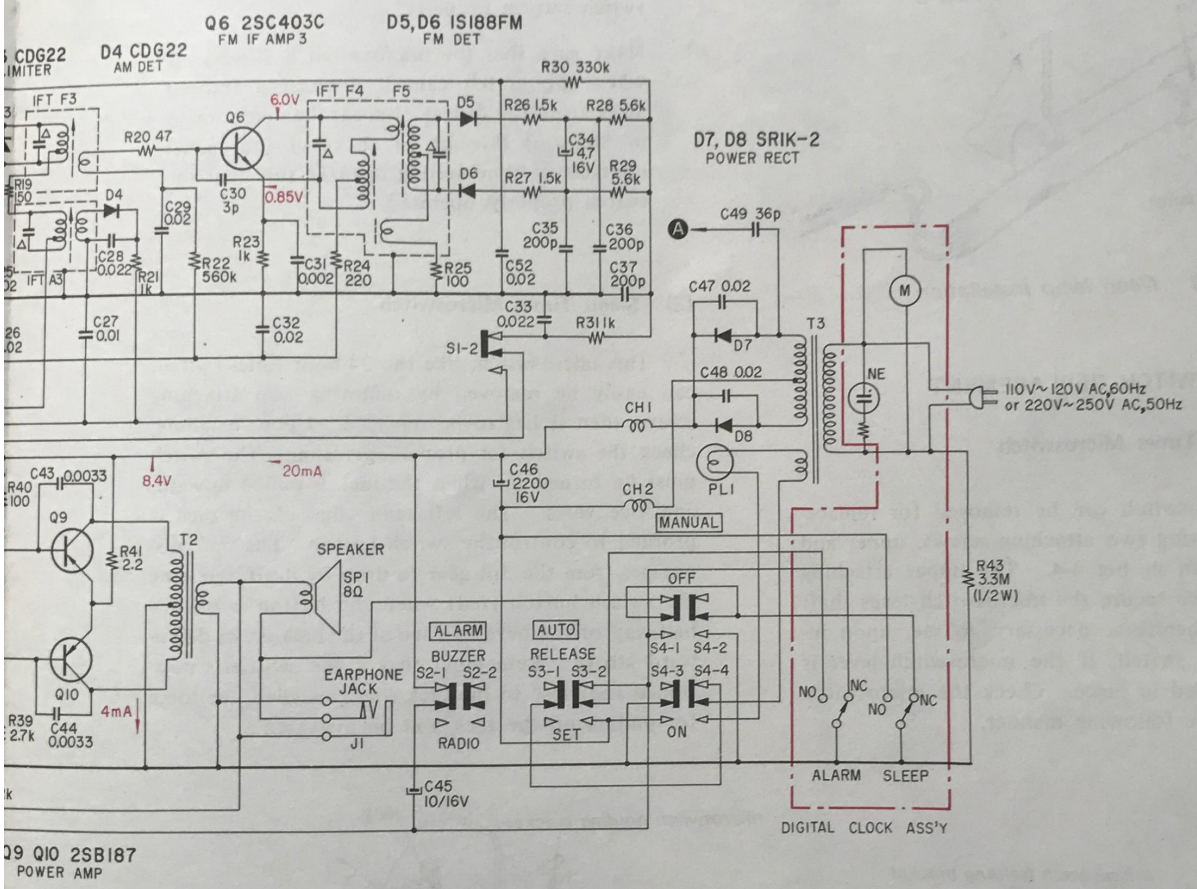


*Fig. 5-1.*

**Note:**

1. All resistors are in Ω, ¼W, ±5% and capacitors are in μF unless otherwise specified.
2. Voltage readings are taken with a 20 kΩ/V DC voltmeter with reference to bold face ground line. Variations may be noted under normal production tolerances.
3. Capacitors marked △ are built in i-f transformers.

## 5-2. MOUNTING DIAGRAM

*– Conductor Side –*

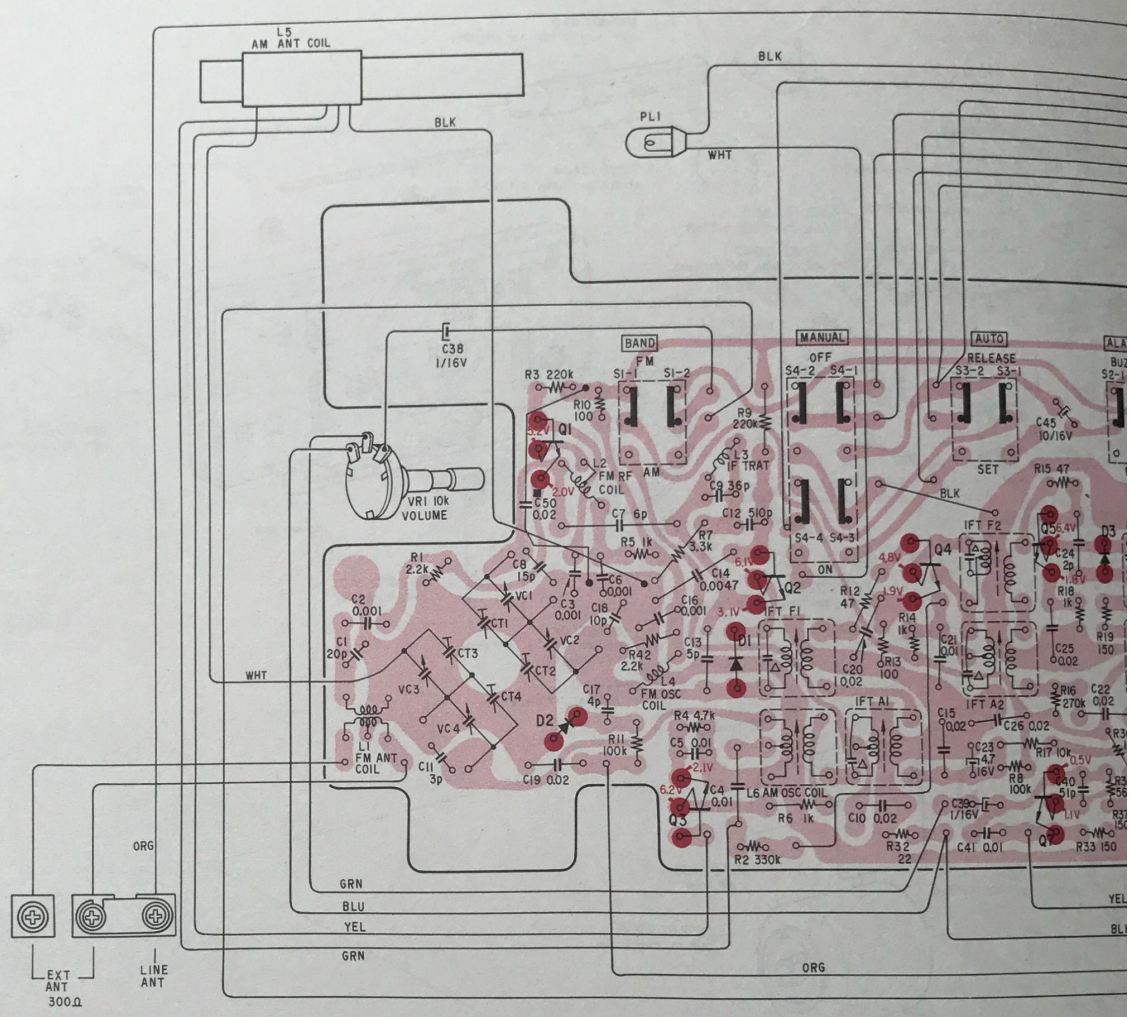


*Fig. 5-*

**Q1 and Q2: 2SC710**

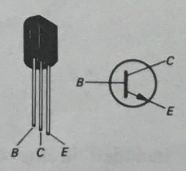


**Q3 thru Q5: 2SC403C**
**Q7 and Q8: 2SC634A**

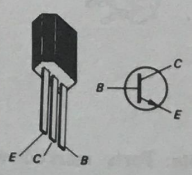


**Q9 and Q10: 2SB187**

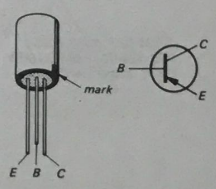


**D1, D3 and D4: CDG-22**
**D5 and D6: 1S188FM**

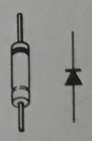

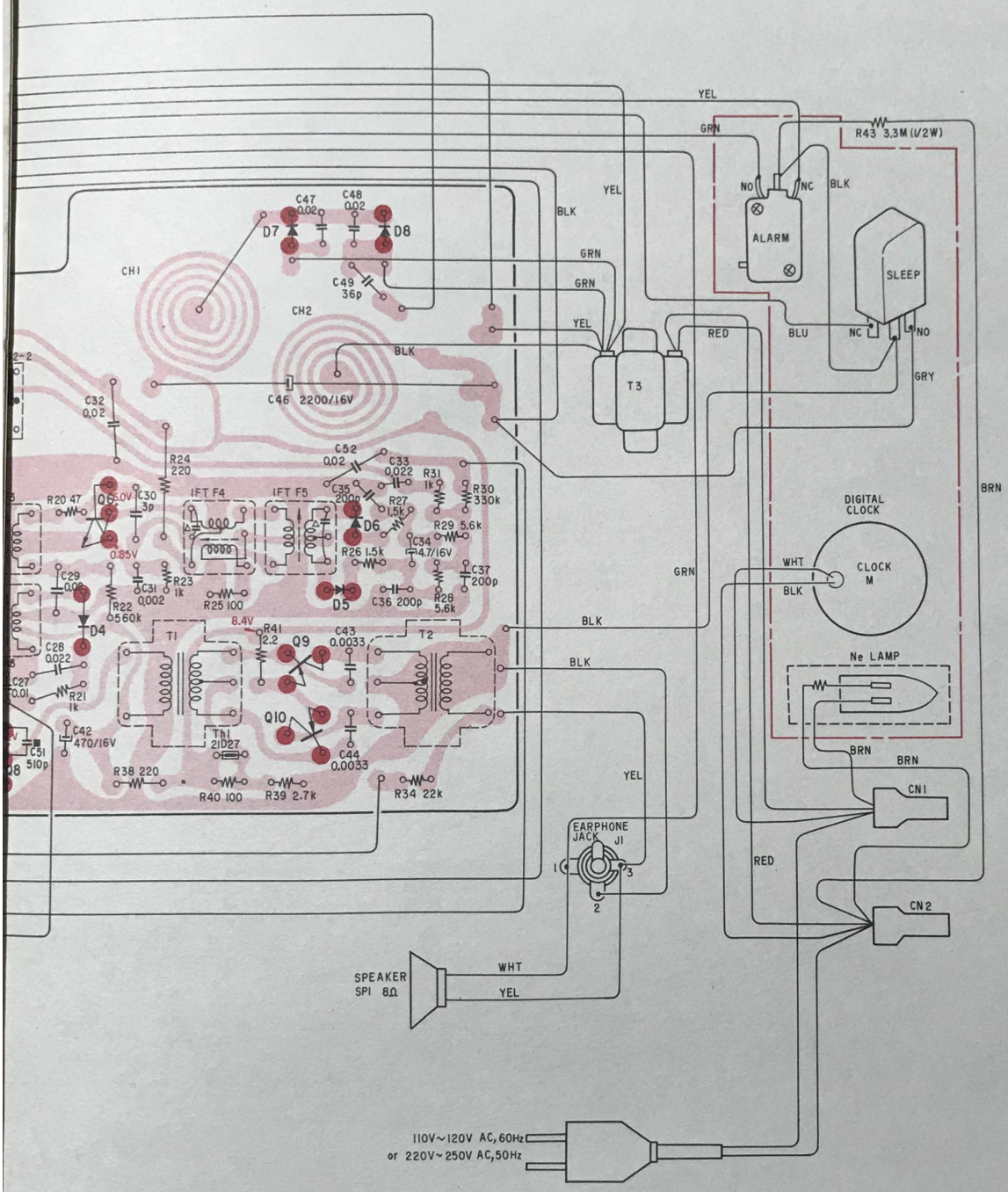


D2: 1S553 D7 and D8: SR1K-2

**Note:**

C50 and C51 marked with ■ are mounted on the conductor side of the printed circuit board.

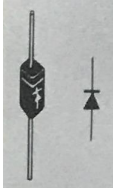

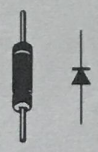

# SECTION 6
# EXPLODED VIEW AND PACKING

## 6-1. EXPLODED VIEW

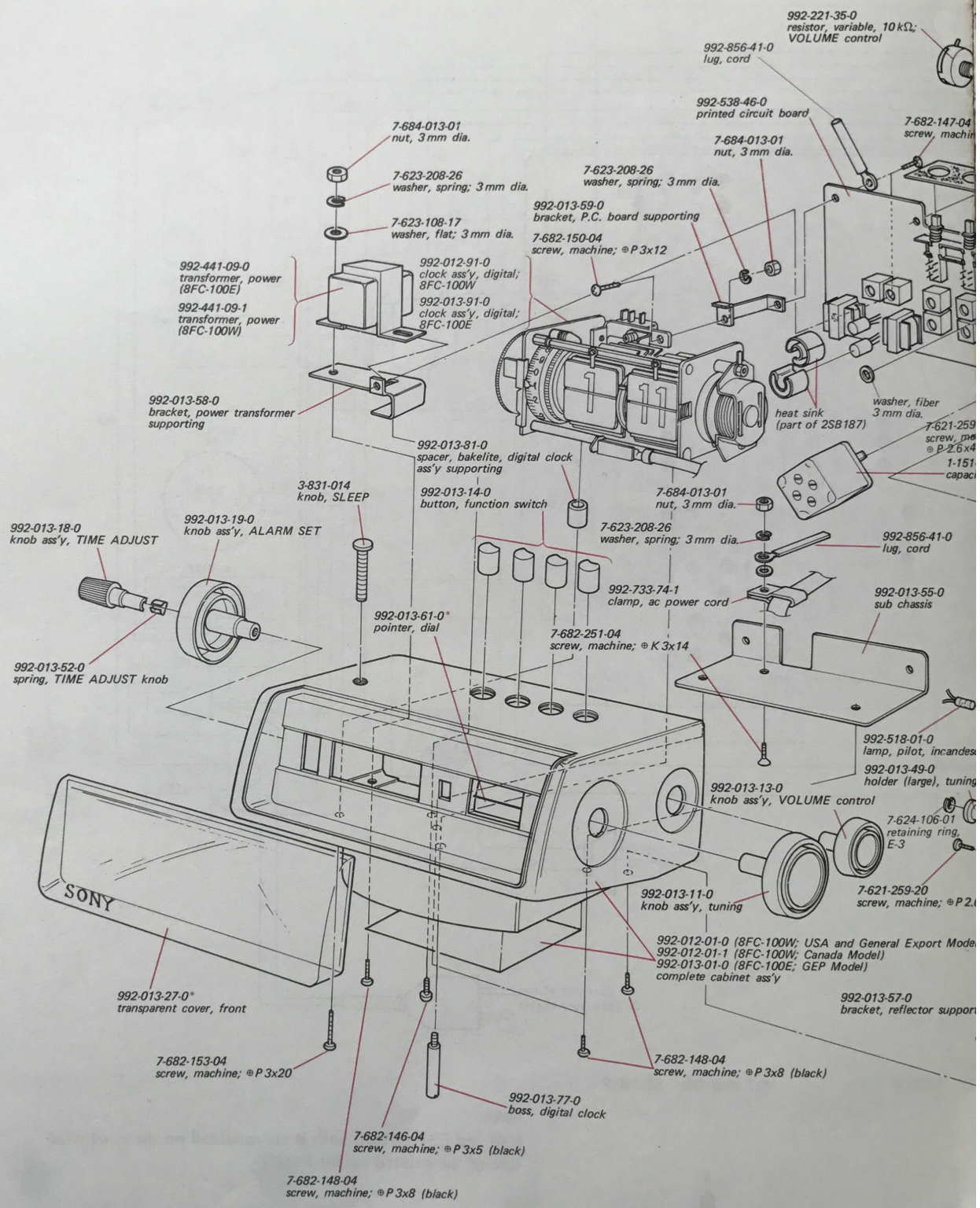

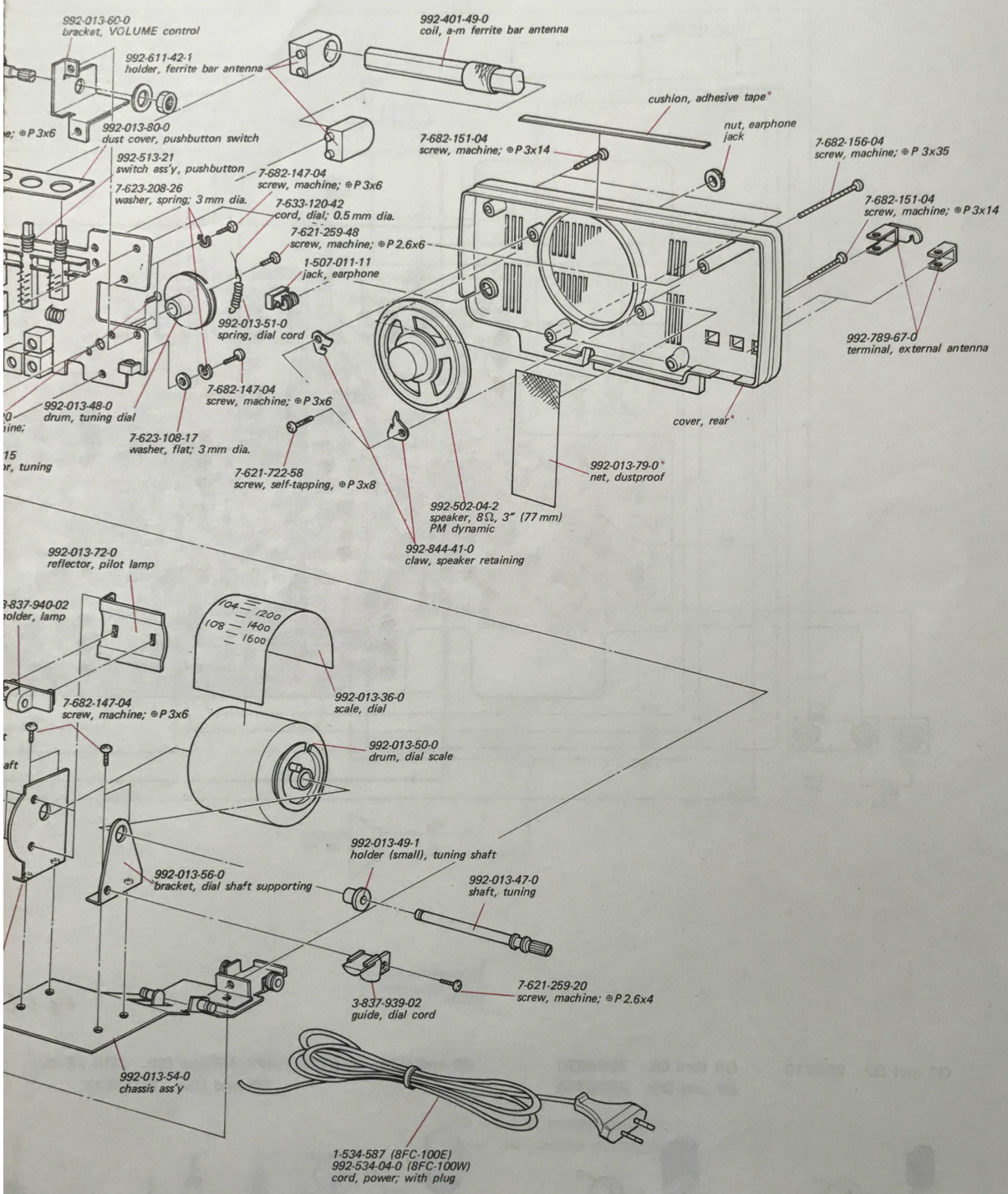


**Note:** Parts marked with * are included in the complete cabinet assembly, part number 992-012-01-0 or 992-012-01-1 or 992-013-01-0.

g. 6-1.

## 6-2. PACKING

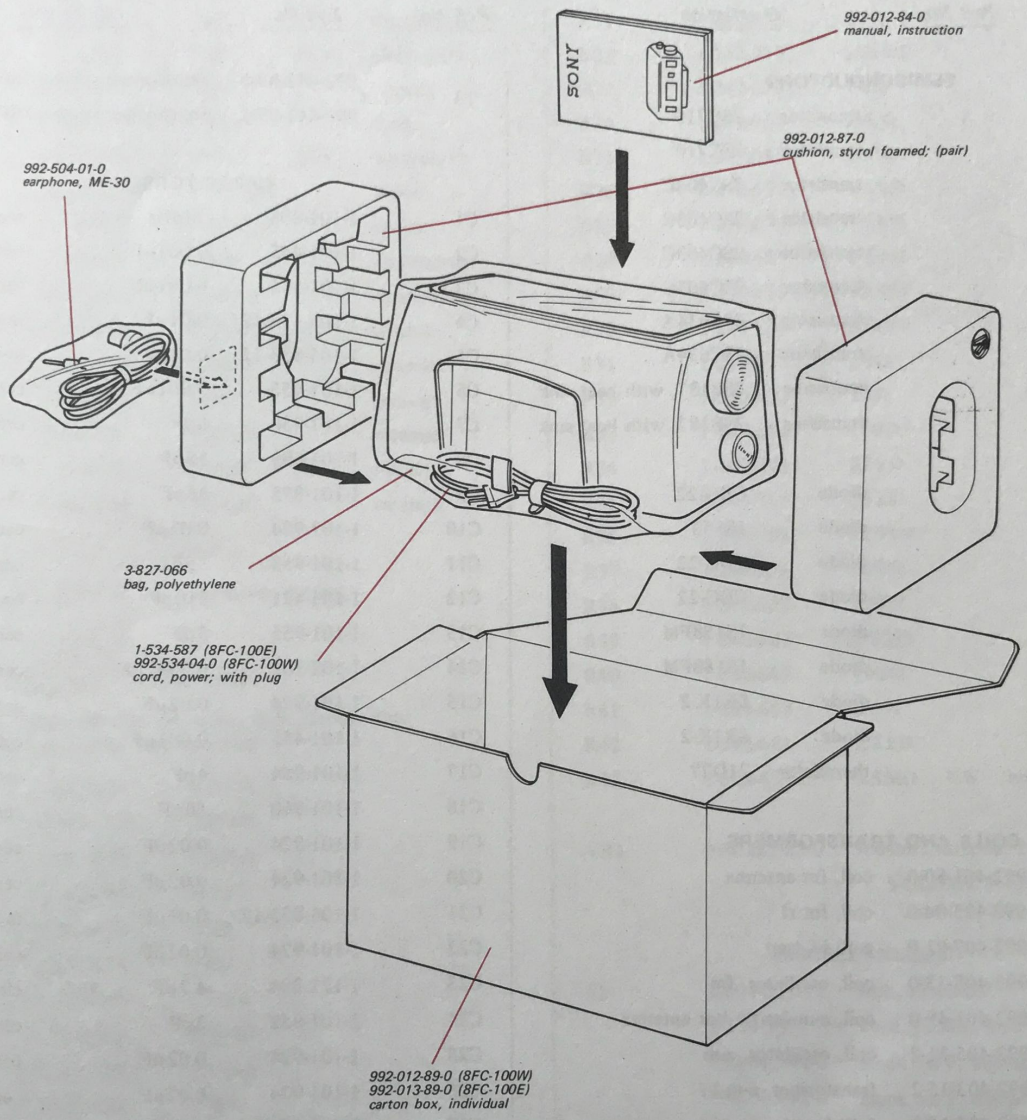


*Fig. 6-2.*

# SECTION 7
# ELECTRICAL PARTS LIST

*When ordering replacement parts you should use PART NUMBER listed on the Parts List or shown in the Exploded View. The reference number should not be used for ordering purposes.*

| Ref. No. | Part No. | Description |
|---|---|---|
| | **SEMICONDUCTORS** | |
| Q1 | | transistor 2SC710 |
| Q2 | | transistor 2SC710 |
| Q3 | | transistor 2SC403C |
| Q4 | | transistor 2SC403C |
| Q5 | | transistor 2SC403C |
| Q6 | | transistor 2SC403C |
| Q7 | | transistor 2SC634A |
| Q8 | | transistor 2SC634A |
| Q9 | | transistor 2SB187, with heat sink |
| Q10 | | transistor 2SB187, with heat sink |
| D1 | | diode CDG-22 |
| D2 | | diode 1S553 |
| D3 | | diode CDG-22 |
| D4 | | diode CDG-22 |
| D5 | | diode 1S188FM |
| D6 | | diode 1S188FM |
| D7 | | diode SR1K-2 |
| D8 | | diode SR1K-2 |
| Th1 | | thermistor 21D27 |
| | **COILS AND TRANSFORMERS** | |
| L1 | 992-401-50-0 | coil, fm antenna |
| L2 | 992-425-04-0 | coil, fm rf |
| L3 | 992-407-01-0 | coil, i-f trap |
| L4 | 992-405-33-0 | coil, oscillator, fm |
| L5 | 992-401-49-0 | coil, a-m ferrite bar antenna |
| L6 | 992-405-21-2 | coil, oscillator, a-m |
| IFT A1 | 992-403-15-2 | transformer, a-m i-f |
| IFT A2 | 992-403-16-2 | transformer, a-m i-f |
| IFT A3 | 992-403-17-2 | transformer, a-m i-f |
| IFT F1 | 992-403-18-2 | transformer, fm i-f |
| IFT F2 | 992-403-19-2 | transformer, fm i-f |
| IFT F3 | 992-403-19-2 | transformer, fm i-f |
| IFT F4 | 992-403-20-2 | transformer, fm discriminator |
| IFT F5 | 992-403-21-2 | transformer, fm discriminator |
| T1 | 992-423-05-1 | transformer, driver |
| T2 | 992-427-09-0 | transformer, output |
| T3 | 992-441-09-0 | transformer, power (8FC-100E) |
| | 992-441-09-1 | transformer, power (8FC-100W) |
| | **CAPACITORS** | |
| C1 | 1-101-898 | 20pF ceramic |
| C2 | 1-101-455 | 0.001μF ceramic |
| C3 | 1-101-455 | 0.001μF ceramic |
| C4 | 1-105-833-12 | 0.01μF mylar |
| C5 | 1-105-833-12 | 0.01μF mylar |
| C6 | 1-101-455 | 0.001μF ceramic |
| C7 | 1-101-956 | 6pF ceramic |
| C8 | 1-101-899 | 15pF ceramic |
| C9 | 1-101-875 | 36pF ceramic |
| C10 | 1-101-924 | 0.02μF ceramic |
| C11 | 1-101-953 | 3pF ceramic |
| C12 | 1-101-421 | 510pF ceramic |
| C13 | 1-101-955 | 5pF ceramic |
| C14 | 1-102-102 | 0.0047μF ceramic |
| C15 | 1-101-924 | 0.02μF ceramic |
| C16 | 1-101-455 | 0.001μF ceramic |
| C17 | 1-101-954 | 4pF ceramic |
| C18 | 1-101-960 | 10pF ceramic |
| C19 | 1-101-924 | 0.02μF ceramic |
| C20 | 1-101-924 | 0.02μF ceramic |
| C21 | 1-105-833-12 | 0.01μF mylar |
| C22 | 1-101-924 | 0.02μF ceramic |
| C23 | 1-121-394 | 4.7μF 16V electrolytic |
| C24 | 1-101-952 | 2pF ceramic |
| C25 | 1-101-924 | 0.02μF ceramic |
| C26 | 1-101-924 | 0.02μF ceramic |
| C27 | 1-105-833-12 | 0.01μF mylar |
| C28 | 1-105-837-12 | 0.022μF mylar |
| C29 | 1-101-924 | 0.02μF ceramic |
| C30 | 1-101-953 | 3pF ceramic |
| C31 | 1-101-919 | 0.002μF ceramic |
| C32 | 1-101-924 | 0.02μF ceramic |
| C33 | 1-105-837-12 | 0.022μF mylar |
| C34 | 1-121-394 | 4.7μF 16V electrolytic |
| C35 | 1-101-017 | 200pF ceramic |

| Ref. No. | Part No. | Description | | |
|---|---|---|---|---|
| C36 | 1-101-017 | 200 pF | | ceramic |
| C37 | 1-101-017 | 200 pF | | ceramic |
| C38 | 1-121-503 | 1 μF | 16 V | electrolytic |
| C39 | 1-121-503 | 1 μF | 16 V | electrolytic |
| C40 | 1-101-883 | 51 pF | | ceramic |
| C41 | 1-105-833-12 | 0.01 μF | | mylar |
| C42 | 1-121-426 | 470 μF | 16 V | electrolytic |
| C43 | 1-105-827-12 | 0.0033 μF | | mylar |
| C44 | 1-105-827-12 | 0.0033 μF | | mylar |
| C45 | 1-121-471 | 10 μF | 16 V | electrolytic |
| C46 | 992-121-01 | 2,200 μF | 16 V | electrolytic |
| C47 | 1-101-924 | 0.02 μF | | ceramic |
| C48 | 1-101-924 | 0.02 μF | | ceramic |
| C49 | 1-101-875 | 36 pF | | ceramic |
| C50 | 1-101-924 | 0.02 μF | | ceramic |
| C51 | 1-101-421 | 510 pF | | ceramic |
| C52 | 1-101-924 | 0.02 μF | | ceramic |
| CT1～CT4, VC1～VC4 | 1-151-215 | capacitor, tuning | | |

**RESISTORS**

All fixed resistors are ±5%, ¼W carbon film type unless otherwise specified.

| Ref. No. | Part No. | Description | | |
|---|---|---|---|---|
| R1 | 1-242-681 | 2.2 kΩ | | |
| R2 | 1-242-733 | 330 kΩ | | |
| R3 | 1-242-729 | 220 kΩ | | |
| R4 | 1-242-689 | 4.7 kΩ | | |
| R5 | 1-242-673 | 1 kΩ | | |
| R6 | 1-242-673 | 1 kΩ | | |
| R7 | 1-242-685 | 3.3 kΩ | | |
| R8 | 1-242-721 | 100 kΩ | | |
| R9 | 1-242-729 | 220 kΩ | | |
| R10 | 1-242-649 | 100 Ω | | |
| R11 | 1-242-721 | 100 kΩ | | |
| R12 | 1-242-641 | 47 Ω | | |
| R13 | 1-242-649 | 100 Ω | | |
| R14 | 1-242-673 | 1 kΩ | | |
| R15 | 1-242-641 | 47 Ω | | |
| R16 | 1-242-731 | 270 kΩ | | |
| R17 | 1-242-697 | 10 kΩ | | |
| R18 | 1-242-673 | 1 kΩ | | |
| R19 | 1-242-653 | 150 Ω | | |
| R20 | 1-242-641 | 47 Ω | | |
| R21 | 1-242-673 | 1 kΩ | | |
| R22 | 1-242-739 | 560 kΩ | | |
| R23 | 1-242-673 | 1 kΩ | | |
| R24 | 1-242-657 | 220 Ω | | |
| R25 | 1-242-649 | 100 Ω | | |
| R26 | 1-242-677 | 1.5 kΩ | | |
| R27 | 1-242-677 | 1.5 kΩ | | |
| R28 | 1-242-691 | 5.6 kΩ | | |
| R29 | 1-242-691 | 5.6 kΩ | | |
| R30 | 1-242-733 | 330 kΩ | | |
| R31 | 1-242-673 | 1 kΩ | | |
| R32 | 1-242-633 | 22 Ω | | |
| R33 | 1-242-653 | 150 Ω | | |
| R34 | 1-242-705 | 22 kΩ | | |
| R35 | 1-242-715 | 56 kΩ | | |
| R36 | 1-242-723 | 120 kΩ | | |
| R37 | 1-242-653 | 150 Ω | | |
| R38 | 1-242-657 | 220 Ω | | |
| R39 | 1-242-683 | 2.7 kΩ | | |
| R40 | 1-242-649 | 100 Ω | | |
| R41 | 1-242-609 | 2.2 Ω | | |
| R42 | 1-242-681 | 2.2 kΩ | | |
| R43 | 1-202-657 | 3.3 MΩ | ½W | composition |
| VR1 | 992-221-35-0 | resistor, variable, 10 kΩ; VOLUME control | | |

**MISCELLANEOUS**

| Ref. No. | Part No. | Description |
|---|---|---|
| J1 | 1-507-011-11 | jack, earphone |
| | 1-534-587 | cord, power; with plug (8FC-100E) |
| | 992-012-91-0 | clock ass'y, digital (8FC-100E) |
| | 992-013-91-0 | clock ass'y, digital (8FC-100W) |
| SP1 | 992-502-04-2 | speaker, 8 Ω, 3" (77 mm) PM dynamic |
| CN1, CN2 | 992-506-01-0 | terminal, solderless, insulated crimping type |
| S1～S4 | 992-513-21 | switch ass'y, pushbutton |
| PL1 | 992-518-01-0 | lamp, pilot, incandescent |
| | 992-534-04-0 | cord, power; with plug (8FC-100W) |
| | 992-538-46-0 | printed circuit board |

SONY CORPORATION

© 1972
Printed in Japan



2A0682-1

# SECTION 5
# SCHEMATIC AND MOUNTING DIAGRAMS

## 5-1. SCHEMATIC DIAGRAM

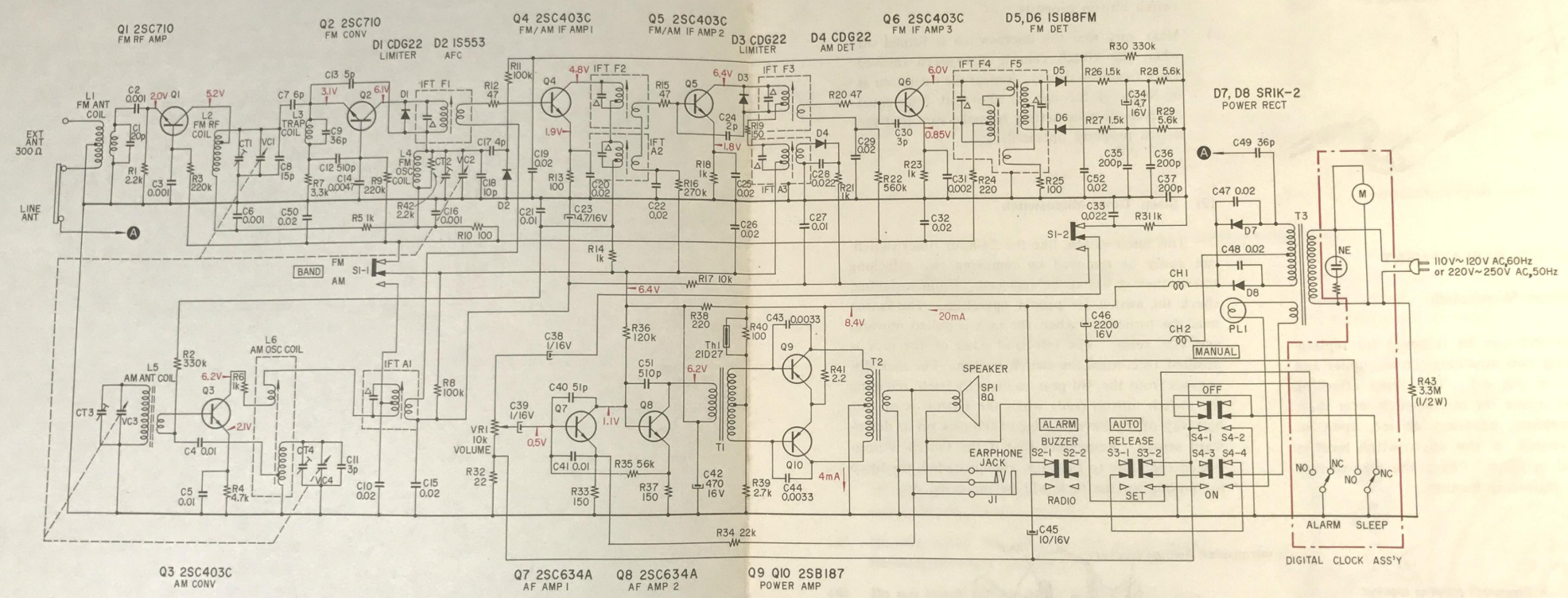


*Fig. 5-1.*

**Note:**

1. All resistors are in Ω, ¼W, ±5% and capacitors are in μF unless otherwise specified.
2. Voltage readings are taken with a 20 kΩ/V DC voltmeter with reference to bold face ground line. Variations may be noted under normal production tolerances.
3. Capacitors marked △ are built in i-f transformers.

## 5-2. MOUNTING DIAGRAM

*– Conductor Side –*

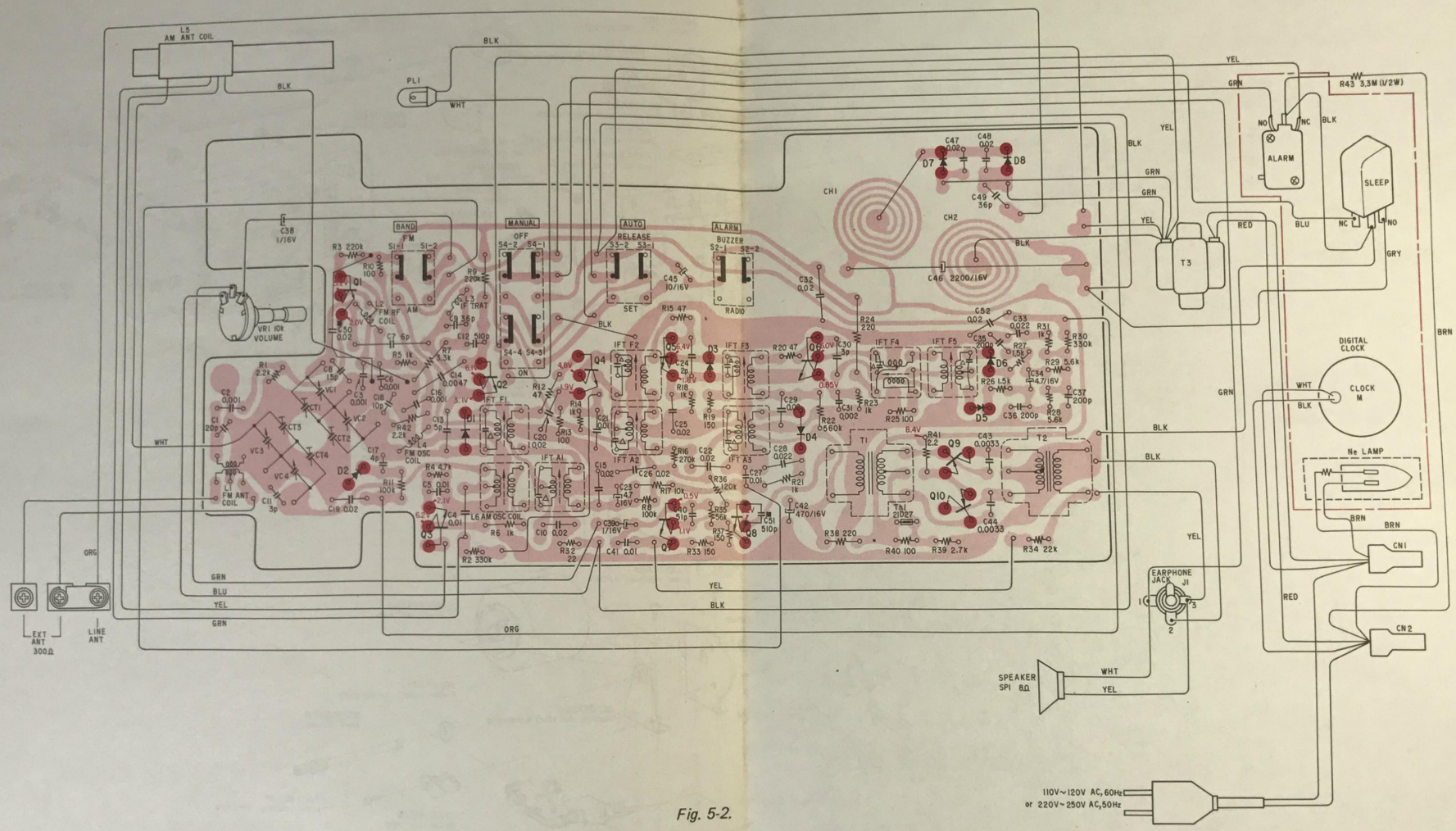


*Fig. 5-2.*

Q1 and Q2: 2SC710

Q3 thru Q5: 2SC403C
Q7 and Q8: 2SC634A

Q9 and Q10: 2SB187

D1, D3 and D4: CDG-22
D5 and D6: 1S188FM

D2: 1S553

D7 and D8: SR1K-2

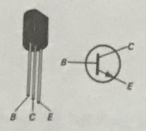


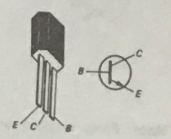


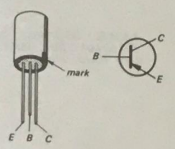


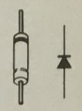

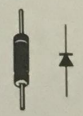

**Note:**

C50 and C51 marked with ■ are mounted on the conductor side of the printed circuit board.

# SECTION 6
# EXPLODED VIEW AND PACKING

## EXPLODED VIEW

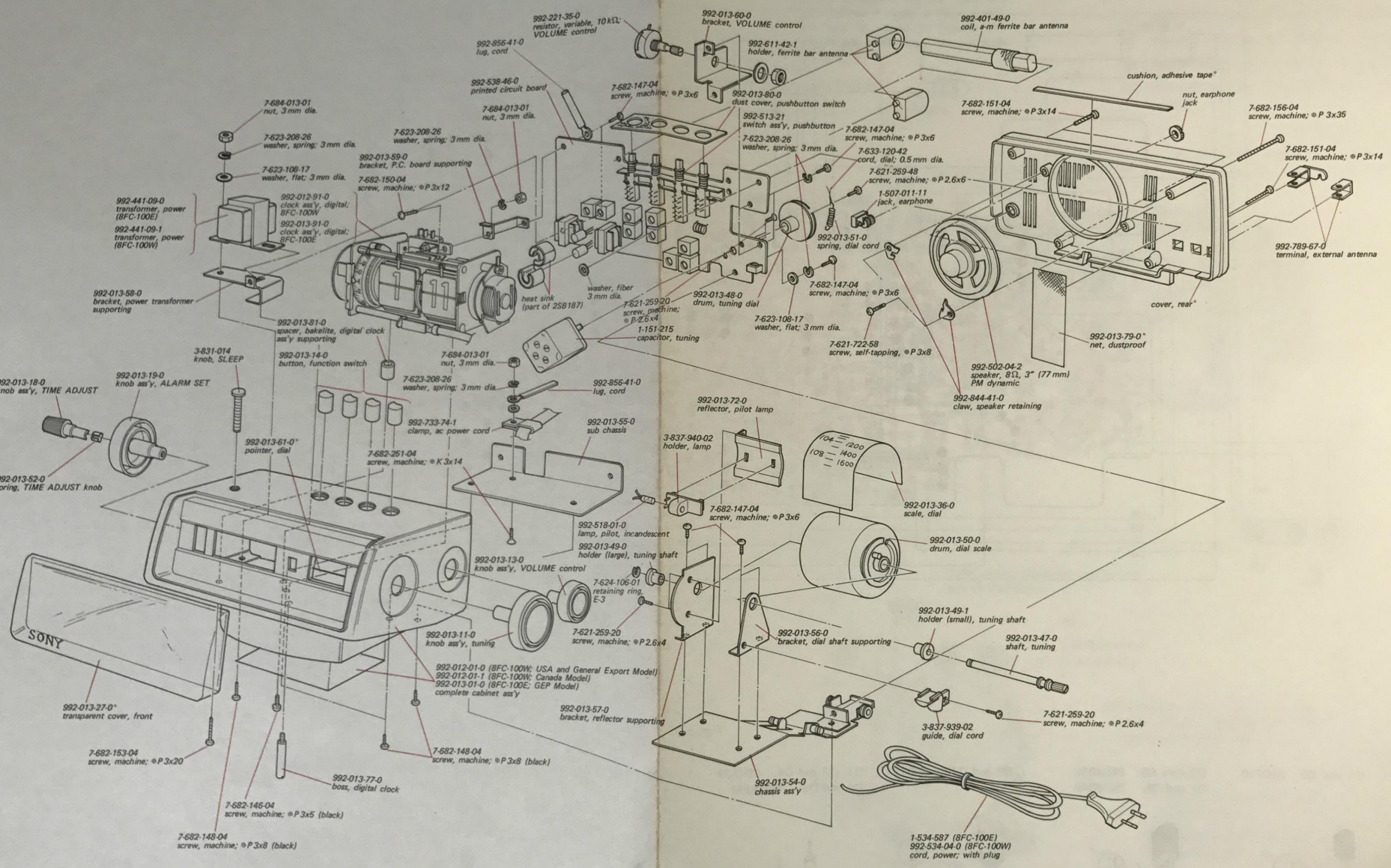


Fig. 6-1.

**Note:** Parts marked with * are included in the complete cabinet assembly, part number 992-012-01-0 or 992-012-01-1 or 992-013-01-0.